## C30904281 6 FT. SIDE ARM ASSEMBLY (MODEL 1800 TOWERS)

| | | | |
|---|---|---|---|
| (1) | CK00044 | 6 FT. SIDE ARM ANGLE KIT | 71.9# |
| (1) | | MISC. ITEMS AND HARDWARE LIST | 35.3# |
| | | TOTAL WEIGHT | 107.2# |

### CK00044 KIT LIST OF MATERIAL

| ITEM | QTY. | PART NO. | DESCRIPTION | WEIGHT |
|---|---|---|---|---|
| 1. | 2 | CS00732 | ANGLE, SIDEARM | 52.4# |
| 2. | 1 | CS00733 | ANGLE, SIDEARM | 5.5# |
| 3. | 2 | CS00734 | ANGLE, SIDEARM | 14.0# |
| | | | TOTAL WEIGHT | 71.9# |

### MISC. ITEMS AND HARDWARE

| ITEM | QTY. | PART NO. | DESCRIPTION | WEIGHT |
|---|---|---|---|---|
| 4. | 1 | C10981204 | PIPE, 2 3/8" O.D. X .134" X 4'-0 | 12.8# |
| 5. | 6 | CS00144 | ADAPTOR CLAMP | 14.4# |
| 6. | 12 | C40025032 | BOLT ASSEMBLY, 5/8 X 3 3/4 A449 (ALL THREAD) | 6.8# |
| 7. | 6 | C40026003 | BOLT ASSEMBLY, 1/2 X 1 1/2 A325 | 1.3# |
| | | | TOTAL WEIGHT | 35.3# |

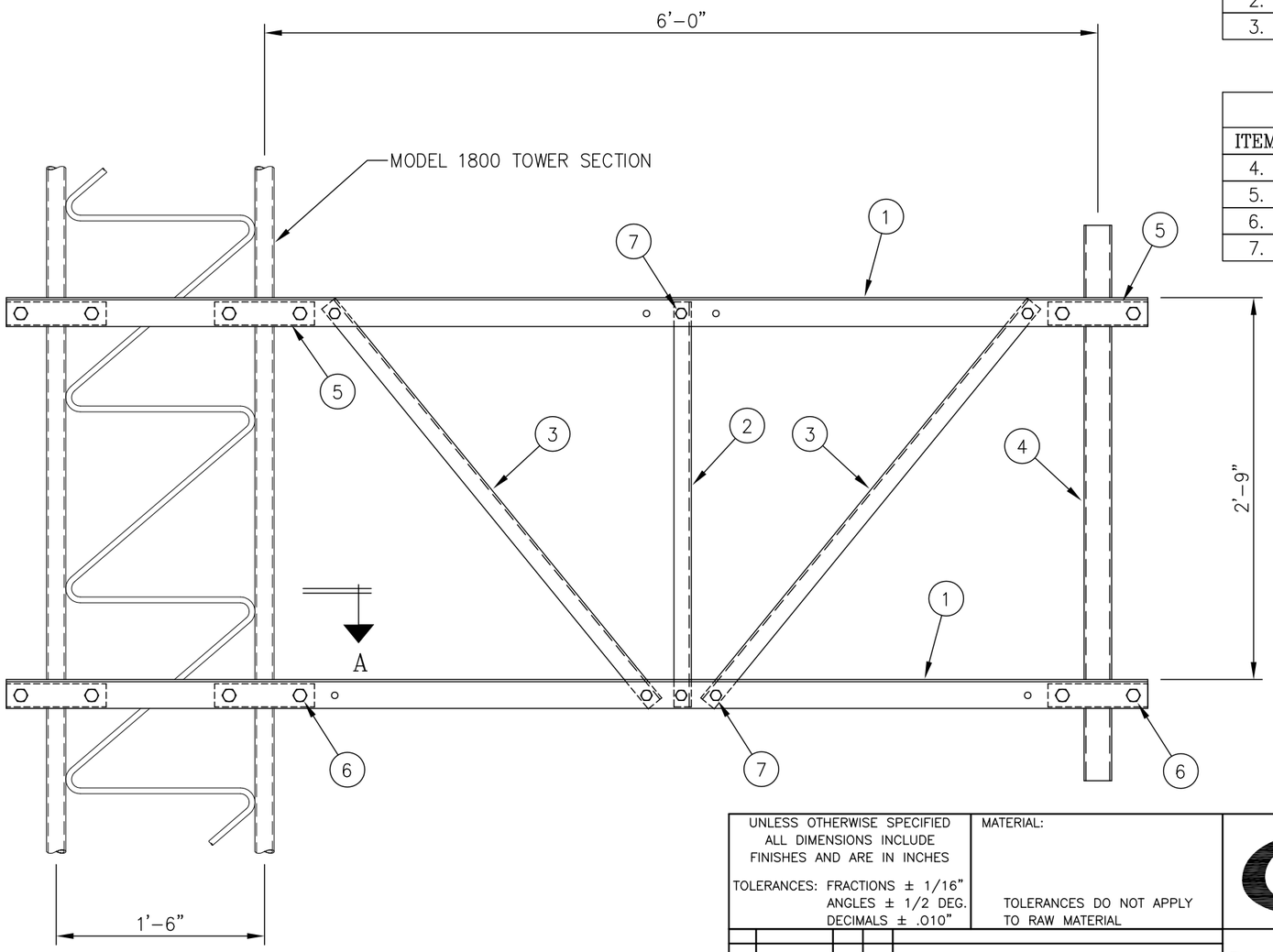


ELEVATION VIEW

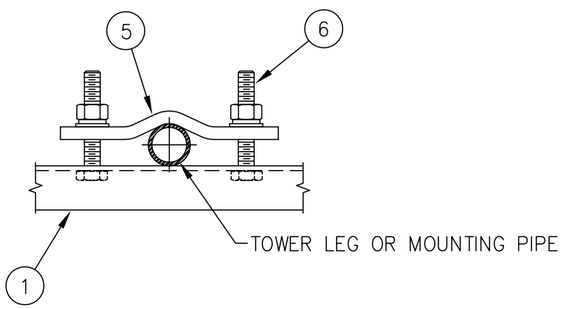


SECTION A-A
(TYPICAL 6 PLACES)

UNLESS OTHERWISE SPECIFIED
ALL DIMENSIONS INCLUDE
FINISHES AND ARE IN INCHES

TOLERANCES: FRACTIONS ± 1/16"
ANGLES ± 1/2 DEG.
DECIMALS ± .010"

MATERIAL:

TOLERANCES DO NOT APPLY
TO RAW MATERIAL

| REV | DATE | DRW | CHK | DESCRIPTION |
|---|---|---|---|---|
| 2 | 1/13/09 | MLC | MC | REVISED PIPE (ITEM 4) |
| 1 | 7/12/04 | WRF | DLW | ADDED MAT'L LISTS & UPGRADED PART NO.'S |

Sabre Communications Corporation ™


CONFIDENTIAL
This document and the information contained herein is the confidential trade secret property of Sabre Communications Corporation ("Sabre") and must not be reproduced, copied or used, in whole or in part, for any purpose without the prior written consent of Sabre.
© 2006 Sabre Communications Corporation. All rights reserved.


# 6 FT. SIDEARM ASSEMBLY FOR MODEL 1800 TOWERS (2 3/8" O.D. ANTENNA MOUNTING PIPE)

| | | SIZE | DRAWING NO. | REV |
|---|---|---|---|---|
| DATE | 05/06/04 | B | C30904281 | 2 |
| DRAWN BY | WRF | | | |
| CHECKED BY | CHH | | SCALE None | PAGE 1 OF 1 |