C1090212 CROSSOVER PLATE KIT				
ITEM	QTY.	PART NO.	DESCRIPTION	WEIGHT
1.	1	CS03116	CROSSOVER PLATE	4
2.	2	C40034139	U-BOLT ASSEMBLY, 1/2 ø X 2 15/16 C-C	2
3.	2	C40034140	U-BOLT ASSEMBLY, 1/2 ø X 3 7/16 C-C	2
			TOTAL WEIGHT	8

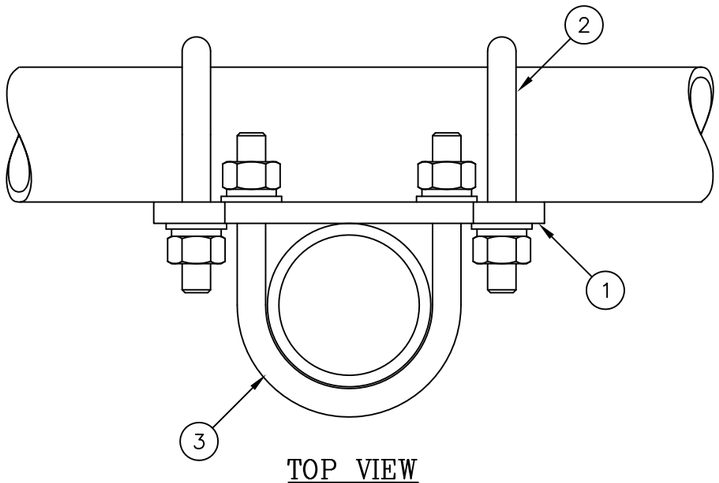

TOP VIEW

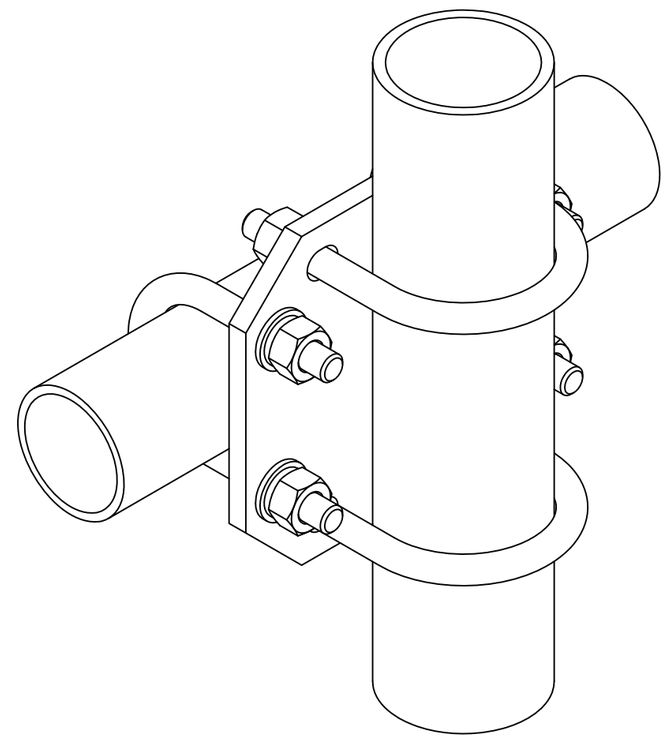

ISOMETRIC VIEW

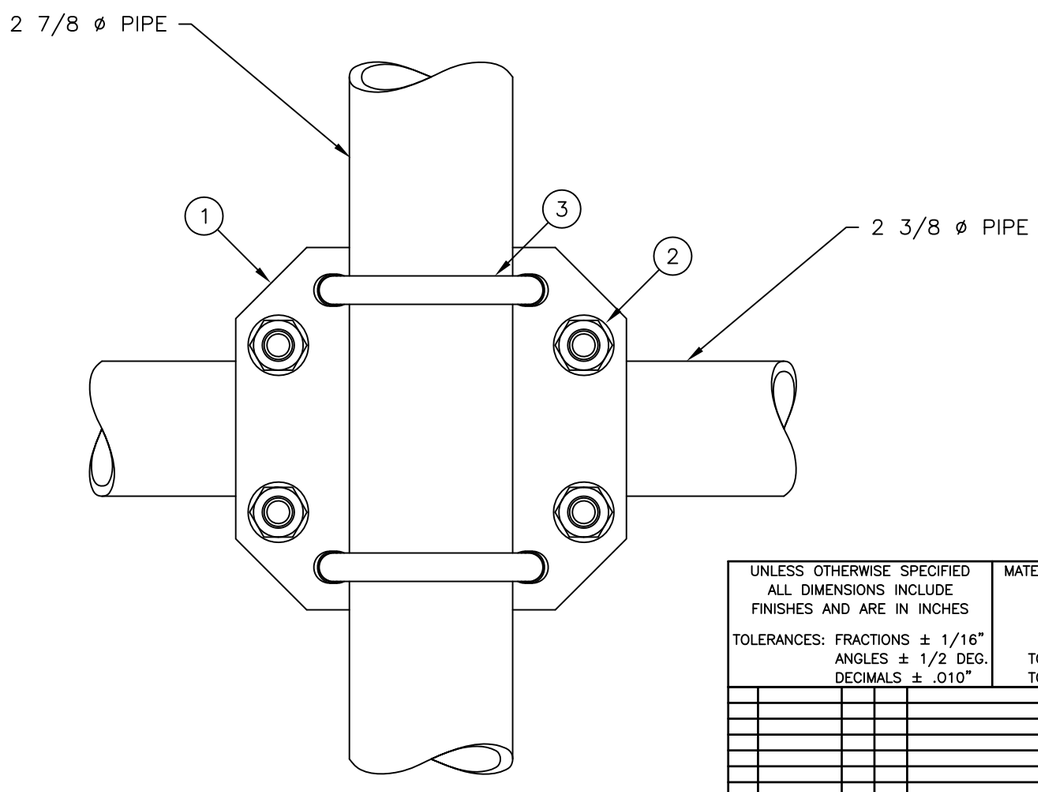

FRONT VIEW

UNLESS OTHERWISE SPECIFIED
ALL DIMENSIONS INCLUDE
FINISHES AND ARE IN INCHES

TOLERANCES: FRACTIONS ± 1/16"
ANGLES ± 1/2 DEG.
DECIMALS ± .010"

MATERIAL:

TOLERANCES DO NOT APPLY
TO RAW MATERIAL

REV	DATE	DRW	CHK	DESCRIPTION

Sabre Industries™
Towers and Poles

CONFIDENTIAL

This document and the information contained herein is the confidential trade secret property of Sabre Communications Corporation ("Sabre") and must not be reproduced, copied or used, in whole or in part, for any purpose without the prior written consent of Sabre.
© 2014 Sabre Communications Corporation. All rights reserved.

CROSSOVER PLATE KIT
2 3/8"ø TO 2 7/8"ø PIPES
(1/2"ø U-BOLTS)

		SIZE	DRAWING NO.	REV
DATE	06/26/14	B	C10902012	0
DRAWN BY	WRF			
CHECKED BY	KLE		SCALE None	PAGE 1 OF 1