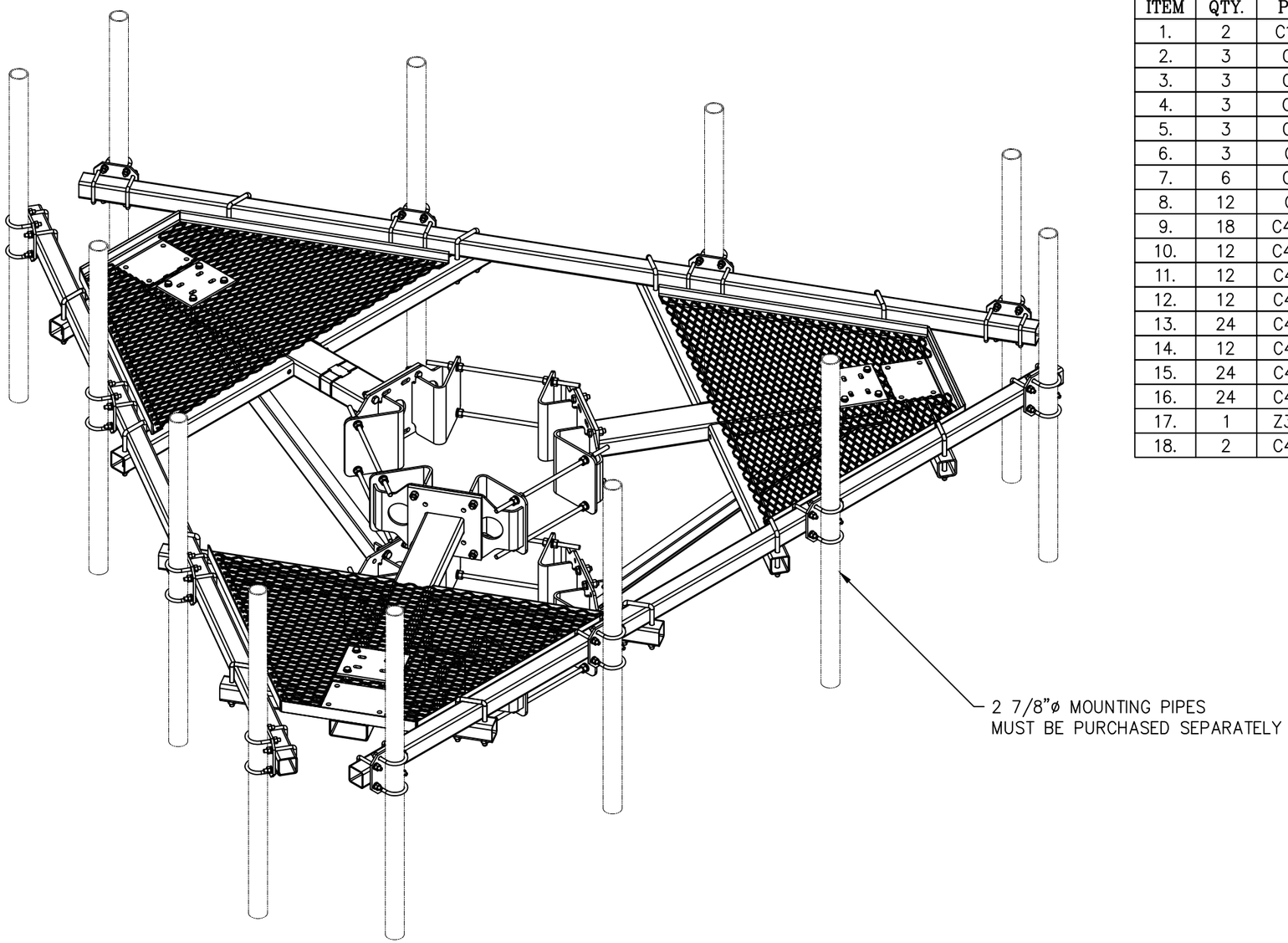

ISOMETRIC VIEW

SEE PAGES 2 & 3 FOR ADDITIONAL DETAILS

C10855447C 12' HD PLATFORM W/CROSSOVERS & COLLARS

ITEM	QTY.	PART NO.	DESCRIPTION	WEIGHT
1.	2	C10112377	TRI-COLLAR BRACKET ASSEMBLY (10"-40" MONOPOLE)	416
2.	3	CW01320	WELDMENT, PLATFORM CORNER	612
3.	3	CS03348	SQUARE TUBE, 3 X 3 X 3/16 X 12'-6	268
4.	3	CS03354	PLATE, UPPER CONNECTION	22
5.	3	CW01322	WELDMENT, KICKER SUPPORT	31
6.	3	CW01291	WELDMENT, KICKER SUPPORT	32
7.	6	CS03372	ANGLE, KICKER	82
8.	12	CS03351	CROSSOVER PLATE	58
9.	18	C40026024	BOLT ASSEMBLY, 5/8 ø X 2 1/4 A325	9
10.	12	C40026023	BOLT ASSEMBLY, 5/8 ø X 2 A325	6
11.	12	C40024106	BOLT ASSEMBLY, 1/2 ø X 6 1/2 GR5 FULL THD	5
12.	12	C40031003	FLATWASHER, 5/8 ø HARDENED ASTM F436	1
13.	24	C40031002	FLATWASHER, 1/2 ø HARDENED ASTM F436	1
14.	12	C40035017	SQ. U-BOLT ASSEMBLY, 5/8 ø X 4 1/4 C-C	25
15.	24	C40035106	SQ. U-BOLT ASSEMBLY, 1/2 ø X 3 5/8 C-C	23
16.	24	C40034140	U-BOLT ASSEMBLY, 1/2 ø X 3 7/16 C-C	22
17.	1	Z30992014	MOUNT CLASSIFICATION TAG C10855445C	1
18.	2	C40062104	STAINLESS STEEL SELF-LOCKING CABLE TIE	1
			TOTAL WEIGHT	1615

UNLESS OTHERWISE SPECIFIED
ALL DIMENSIONS INCLUDE
FINISHES AND ARE IN INCHES

TOLERANCES: FRACTIONS ± 1/16"
ANGLES ± 1/2 DEG.
DECIMALS ± .010"

MATERIAL:

TOLERANCES DO NOT APPLY
TO RAW MATERIAL

REV	DATE	DRW	CHK	DESCRIPTION
1	04/18/16	WRF	KLE	DESIGN UPDATE

Sabre Industries™
Towers and Poles

CONFIDENTIAL
This document and the information contained herein is the confidential trade secret property of Sabre Communications Corporation ("Sabre") and must not be reproduced, copied or used, in whole or in part, for any purpose without the prior written consent of Sabre.
© 2016 Sabre Communications Corporation. All rights reserved.

12' HD PLATFORM WITH COLLAR & 2 7/8"ø – 3" SQUARE CROSSOVERS FITS 10"ø TO 40"ø MONOPOLES

		SIZE	DRAWING NO.	REV
DATE	02/16/16	B	C10855447C	1
DRAWN BY	WRF			
CHECKED BY	KLE		SCALE None	PAGE 1 OF 3

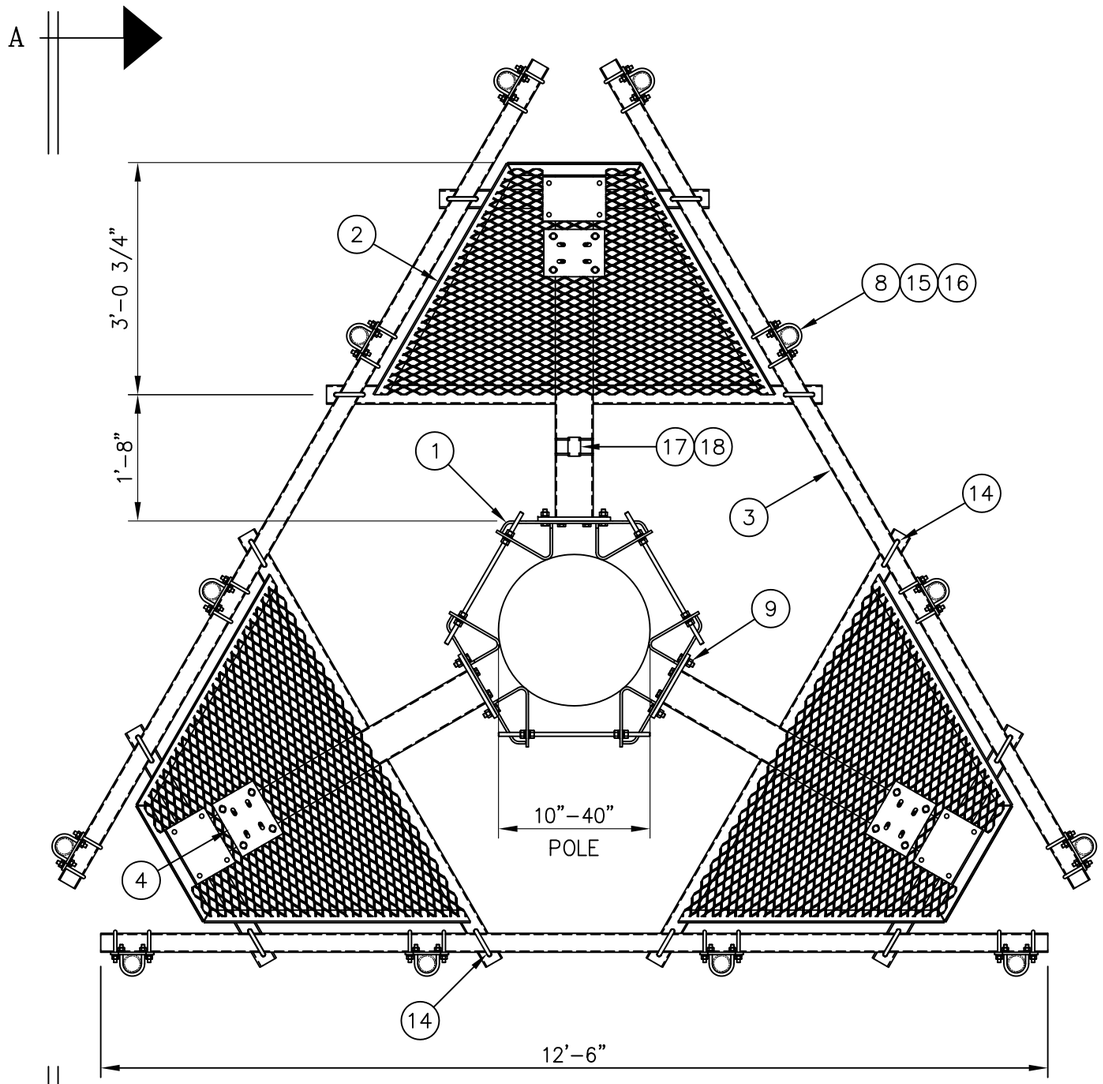

PLAN VIEW

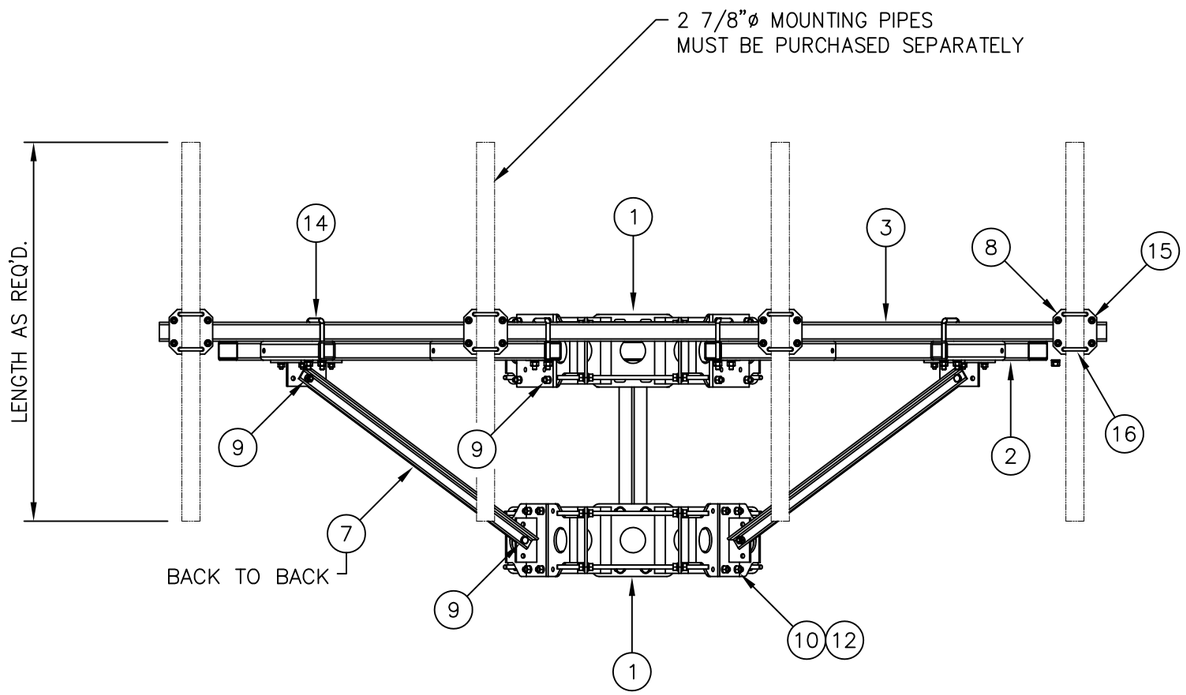

FRONT VIEW

A
PAGE 3

UNLESS OTHERWISE SPECIFIED
ALL DIMENSIONS INCLUDE
FINISHES AND ARE IN INCHES

TOLERANCES: FRACTIONS ± 1/16"
ANGLES ± 1/2 DEG.
DECIMALS ± .010"

MATERIAL:

TOLERANCES DO NOT APPLY
TO RAW MATERIAL

REV	DATE	DRW	CHK	DESCRIPTION
1	04/18/16	WRF	KLE	DESIGN UPDATE

Sabre Industries™
Towers and Poles

CONFIDENTIAL
This document and the information contained herein is the confidential trade secret property of Sabre Communications Corporation ("Sabre") and must not be reproduced, copied or used, in whole or in part, for any purpose without the prior written consent of Sabre.
© 2016 Sabre Communications Corporation. All rights reserved.

12' HD PLATFORM WITH COLLAR & 2 7/8"ø – 3" SQUARE CROSSOVERS FITS 10"ø TO 40"ø MONOPOLES

		SIZE	DRAWING NO.	REV
DATE	02/16/16	B	C10855447C	1
DRAWN BY	WRF			
CHECKED BY	KLE		SCALE None	PAGE 2 OF 3

TRI-COLLAR NOTES:

1. THERE ARE (2) LENGTHS OF THREADED ROD SUPPLIED TO ACCOMMODATE DIAMETERS LISTED BELOW
   USE 5/8 X 1'-6" THREADED ROD ASSEMBLY FOR 10"-24" MONOPOLE DIAMETERS
   USE 5/8 X 2'-9" THREADED ROD ASSEMBLY FOR 24"-40" MONOPOLE DIAMETERS (SEE NOTE 2)
2. THREADED ROD MAY BE SHORTENED IF REQUIRED, FIELD CUT AND COLD GALV SPRAY TO SUIT.
3. THIS DISTANCE MUST BE EQUAL IN ALL (3) THREE LOCATIONS TO ENSURE THE STRUCTURAL INTEGRITY OF THE THREADED RODS AS WELL AS 120° SEPARATION.
4. FOR MONOPOLES 13" DIA. OR SMALLER, ONLY (1) ONE NUT AND (1) ONE LOCKWASHER ARE REQUIRED BETWEEN THE TRI-COLLAR BRACKETS.
   FOR MONOPOLES LARGER THAN 13" DIA., (2) TWO NUTS AND (2) TWO LOCKWASHERS ARE REQUIRED BETWEEN THE TRI-COLLAR BRACKETS.

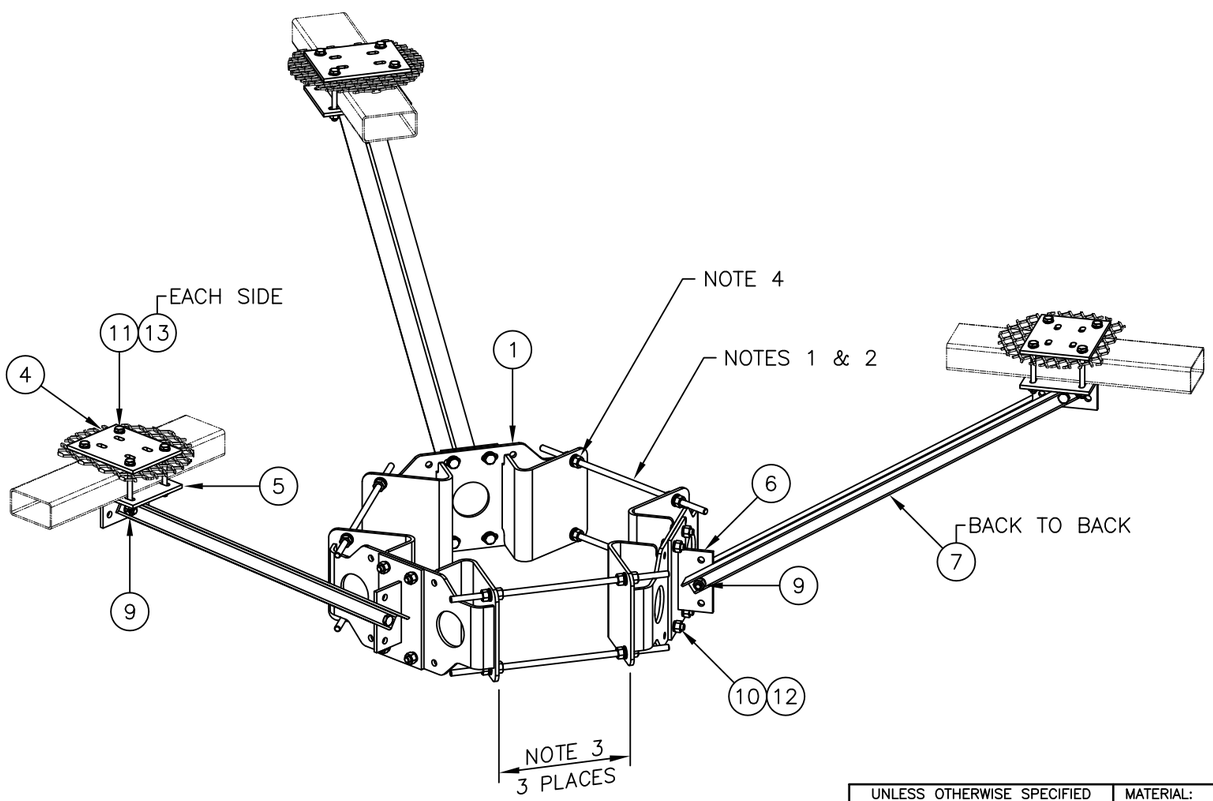

TRI-COLLAR & PLATFORM REINFORCEMENT DETAIL

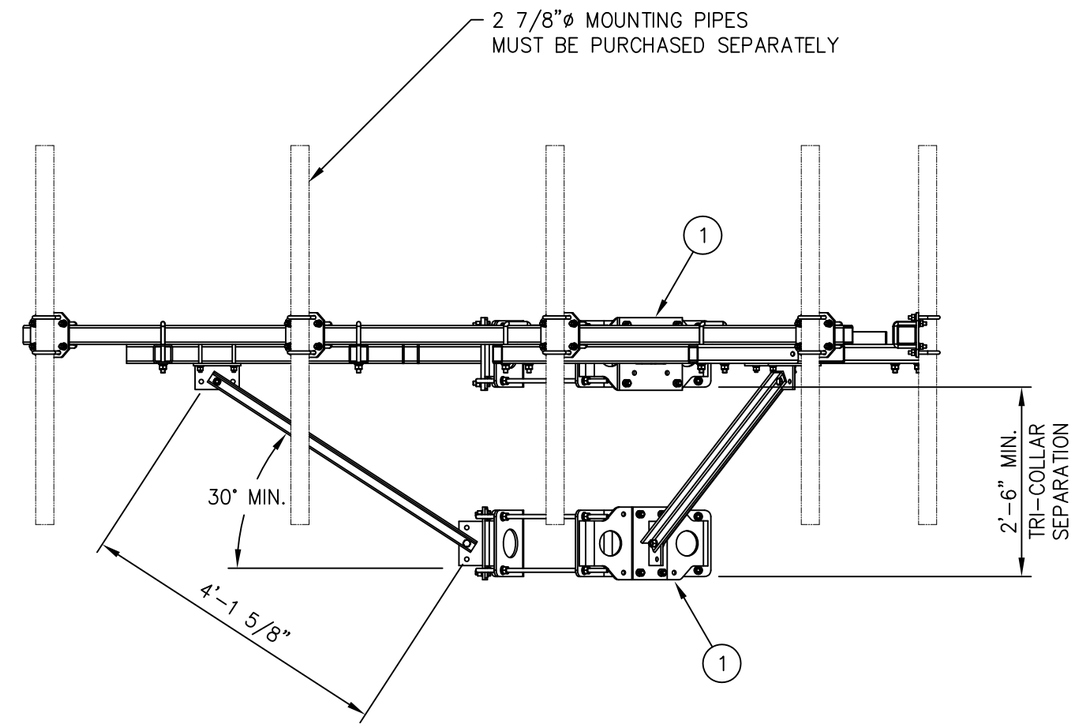

VIEW A-A
ROTATED 90°

UNLESS OTHERWISE SPECIFIED
ALL DIMENSIONS INCLUDE
FINISHES AND ARE IN INCHES

TOLERANCES: FRACTIONS ± 1/16"
ANGLES ± 1/2 DEG.
DECIMALS ± .010"

MATERIAL:

TOLERANCES DO NOT APPLY
TO RAW MATERIAL

REV	DATE	DRW	CHK	DESCRIPTION
1	04/18/16	WRF	KLE	DESIGN UPDATE

Sabre Industries™
Towers and Poles

CONFIDENTIAL
This document and the information contained herein is the confidential trade secret property of Sabre Communications Corporation ("Sabre") and must not be reproduced, copied or used, in whole or in part, for any purpose without the prior written consent of Sabre.
© 2016 Sabre Communications Corporation. All rights reserved.

12' HD PLATFORM WITH COLLAR &
2 7/8"ø - 3" SQUARE CROSSOVERS
FITS 10"ø TO 40"ø MONOPOLES

		SIZE	DRAWING NO.	REV
DATE	02/16/16	B	C10855447C	1
DRAWN BY	WRF			
CHECKED BY	KLE		SCALE None	PAGE 3 OF 3